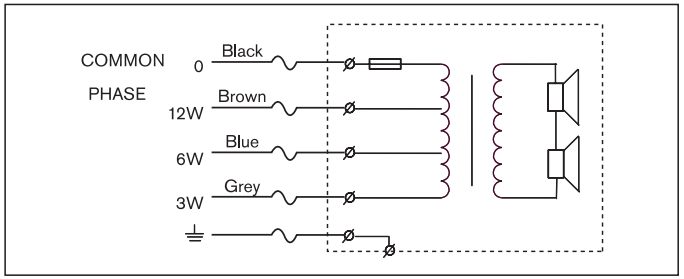

Circuit diagram

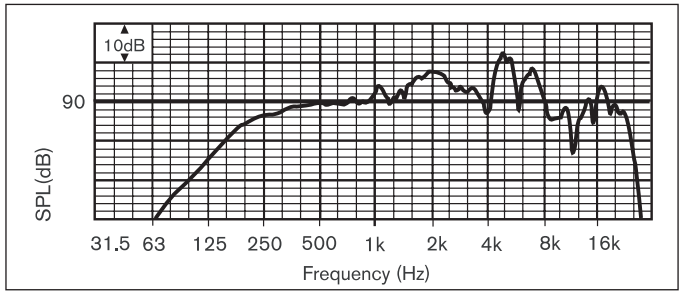

Frequency response

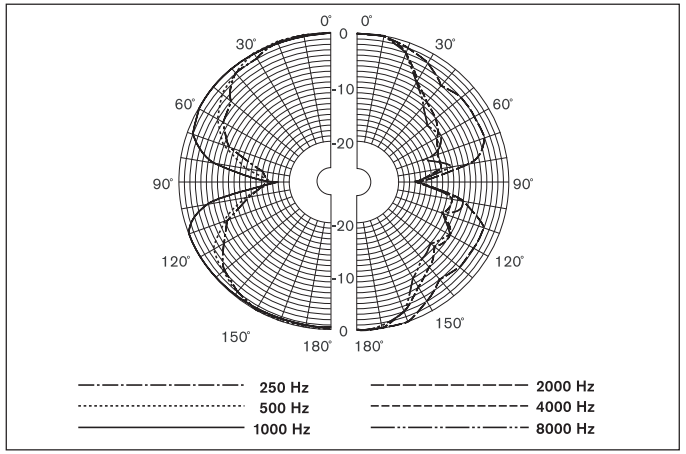

Polar diagram (measured with pink noise)

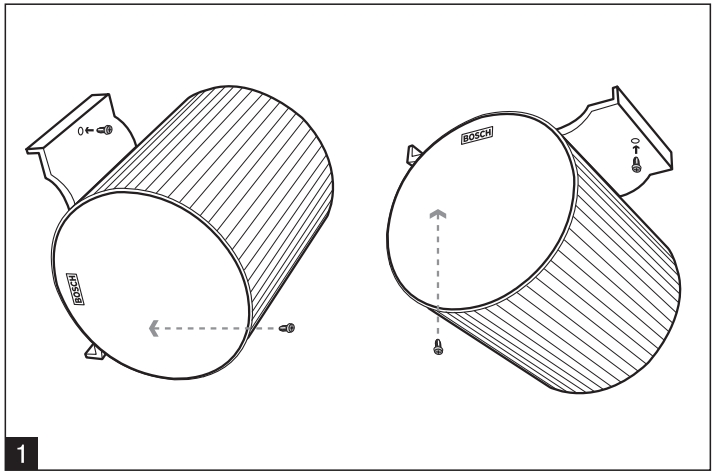

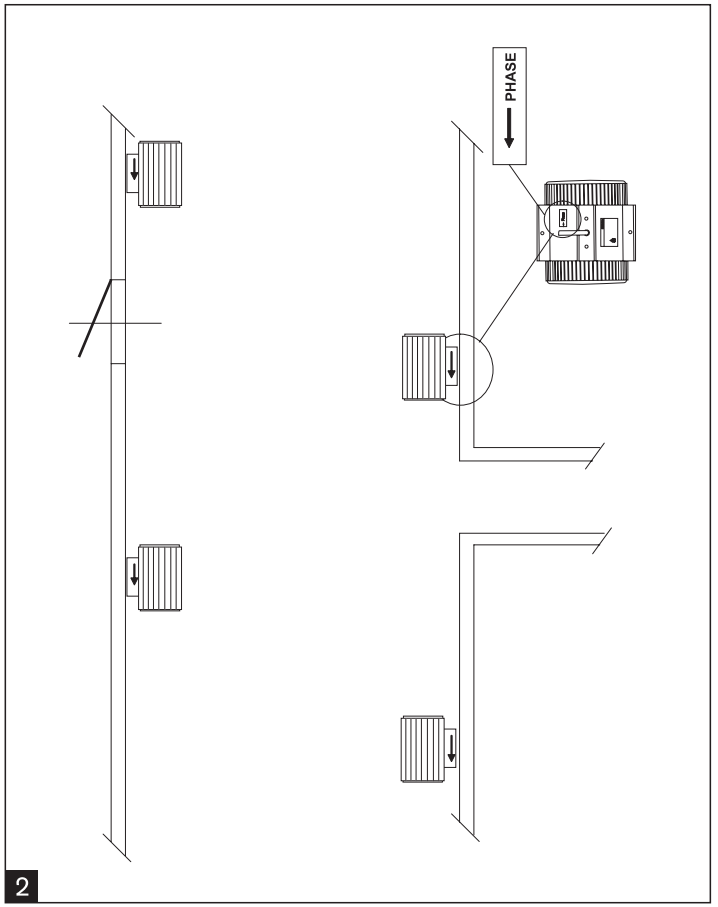

3938 988 06811/04
©2004 Bosch Security Systems Data subject to change without notice.

BOSCH